RINO OVAL LIGHTING FIXTURE IN ALUMINIUM 60W 1 LAMPHOLDER E27 INLET 2XM20 CAGE CAST

SERIES RINO FIXTURE

CODE 831095



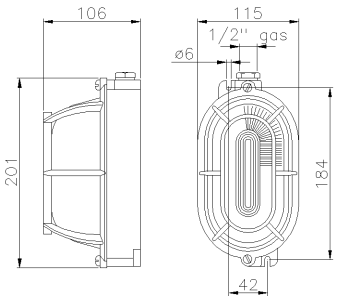

Datasheet

Specifications

Net Weight	0.87 KG
Shock resistance	IK07 according to IEC/EN 62262
Frequency	0/50/60Hz
IP Protection degree	IP66
Rated operating voltage	230V CA-CC
Manufacturing material	Aluminum alloy
Insulation Class	I
Lamp power	MAX 60W(Ta+50°C)/40W(Ta+70°C)
Lampholder type	E27
Dimensions	199X112 mm
Hole type	M20
Optics	Symmetrical
Diffuser type	TRANSPARENT PRISMATIC GLASS
Min. Amb. Temp.	-40°C
Max. Amb. Temp.	+70°C
Surface finishing	PAINTED GREY RAL7035

Reference Standards and Directives

Certification and approval marks	UKCA, CE, CB DEKRA
Directives	2009/125/EC (ERP), 2011/65/EU (RoHS), 2012/19/EU (WEEE), 2014/35/EU (LVD), Reg. EU 2019/2020 (EcoDesign)
Reference Standards	EN 60598-1:2015, EN 60598-1:2015/A1:2018, EN 60598-1:2015/AC:2015, EN 60598 -1:2015/AC:2016, EN 60598-1:2015/AC:2017, EN 60598-2-1:1989, EN IEC 63000:2018

Equipment Included

The images are purely indicative. The indicated values of luminous flux and declared power have tolerances of +/- 7%. Palazzoli reserves the right to make changes without notice.

Palazzoli S.p.A. - Società unipersonale - Via F. Palazzoli, 31 - 25128 Brescia - Italy - tel. +39 030 2015.1 - fax +39 030 2015.258 - www.palazzoli.com - export@palazzoli.it