TAISBOX BOX IN THERMOSETTING GRP 370X250X115mm WITH BACK PLATE WITH WINDOWS c/b/aa/b

SERIES TAIS Grande
BOX FOR ENCLOSURE

CODE 531442

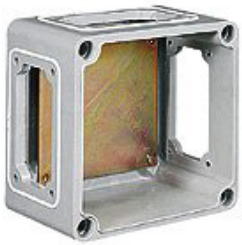

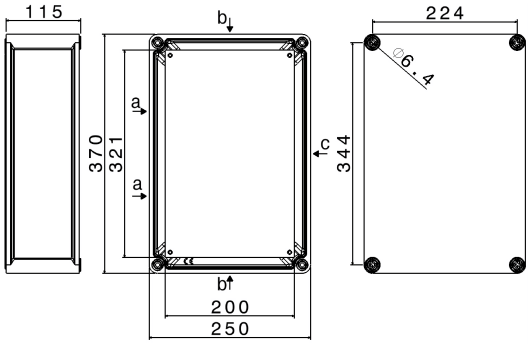

Datasheet

Electrical characteristics

Insulation Class	II
Rated insulation voltage	1000 V
Rated operating voltage	-
Dissipable Power	-

Mechanical characteristics

Manufacturing material	Palazzoli Thermosetting GRP
Treatment type	-
Surface finishing	-
Color	Grey RAL 7042
Execution	Board
Height Box	115 mm
Cover type	-
N. of modules on DIN rail	-
Hole type	F type B+C
Window type	
IP Protection degree	IP65
Additional IPdegree protection	-
Shock resistance	IK10 according to IEC/EN 62262
Resistance to Glow wire	960°C
Flame rating according UL94	V-0
Corrosivity category	-
Working Environment Temp.	Min: -40°C ;Max: +90°C
Warehousing Temperature	Min: -50°C ;Max: +90°C
Dimensions	250X370X115 mm
Internal dimensions	-
Net Weight	3.7 KG

Reference Standards and Directives

Certification and approval marks	NYCE COLOMBIA, CE, UKCA
Directives	2014/35/EU (LVD)
Reference Standards	EN 60670-1:2005, EN 60670-1:2005/A1:2013, EN 60670-1:2005/AC:2007, EN 60670 -1:2005/AC:2010, EN 60670-22:2006, EN 62208:2011

The images are purely indicative. Palazzoli reserves the right to make changes without notice.